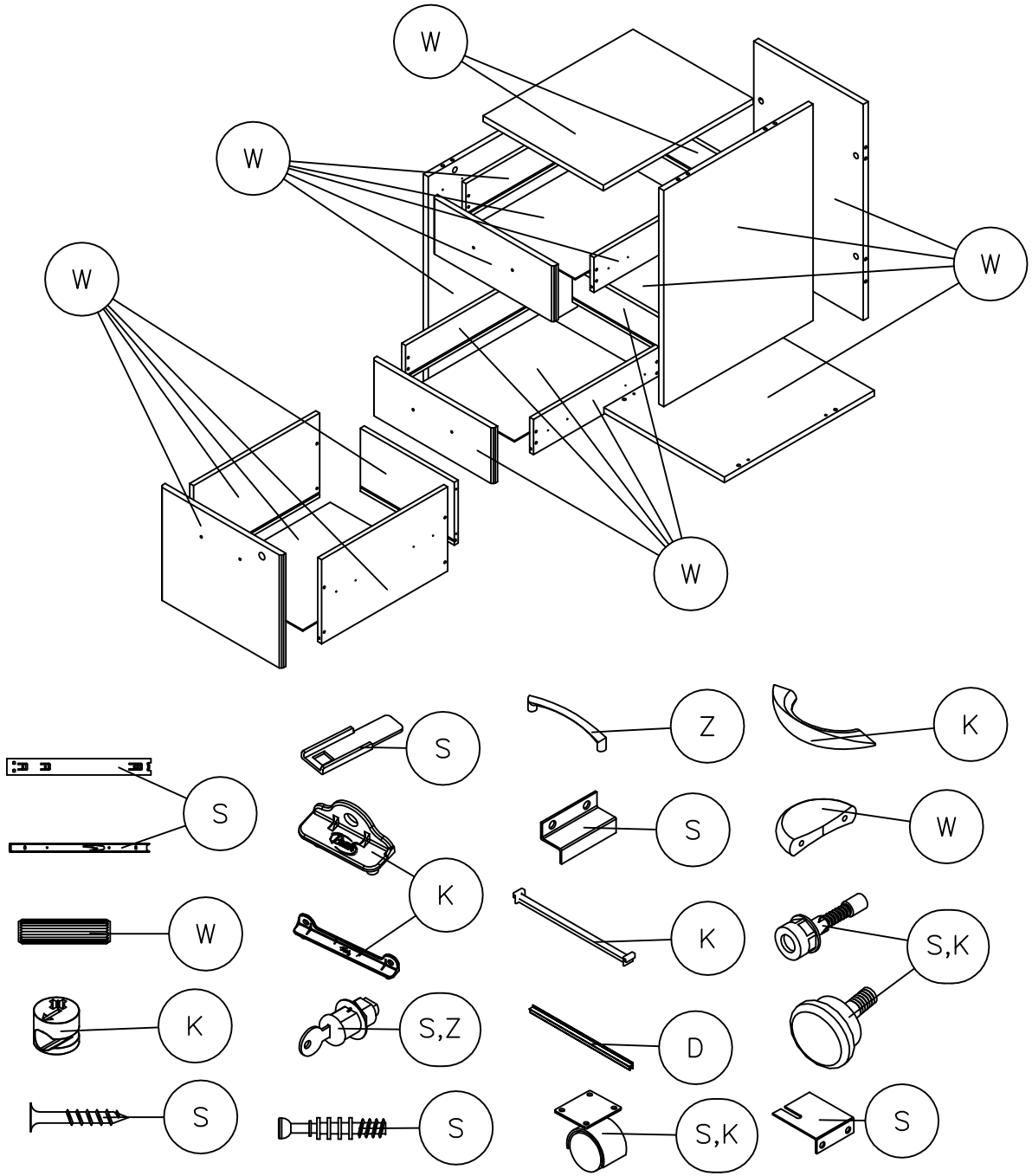

BUSH BUSINESS FURNITURE

SERIES C

1-800-950-4782

ALUMINUM:	A
FABRIC:	F
GLASS:	G
STEEL:	S
WOOD:	W
ZINC:	Z
PLASTIC 1:	B
PLASTIC 2:	C
PLASTIC 3:	D
PLASTIC 4:	E
PLASTIC 5:	H
PLASTIC 6:	J
PLASTIC 7:	K
PLASTIC 9:	L

RECYCLING CONTENT

RECOMMENDED TOOLS

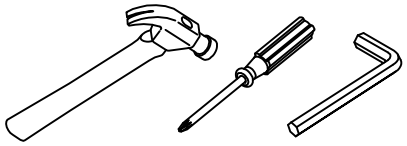

Estimated Disassembly Time: 15